Sediment Control System (SCS) Permit Applications

The purpose of this document is to provide developers with information and requirements concerning Sediment Control System (SCS) Permits. It outlines the components of the erosion and sediment control (ESC) plan submission and environmental monitoring requirements associated with the SCS permit.

"This information is provided for convenience only and is not in substitution of applicable City Bylaws or Provincial or Federal Codes or laws. You must satisfy yourself that any existing or proposed construction or other works complies with such Bylaws, Codes or other laws."

Overview

Burnaby Watercourse Bylaw No. 9044 prohibits the discharge of silt and other contaminants to streams, creeks, waterways, watercourses, waterworks, ditches, drains, sewers and storm sewers. A copy of the Burnaby Watercourse Bylaw No. 9044 can be obtained from the City Clerks Department.

Unless the Engineering Department advises in writing that a sediment control system (SCS) is not necessary, the Building Department will assume that all projects which involve excavation will require a SCS Permit. No further Building Permits will be issued until the SCS is complete and accepted.

1.0 Erosion and Sediment Control (ESC) Plan Submission

The ESC Plan shall be designed, signed, and sealed by a professional engineer and must include, but is not limited to, the following:

- property line(s) designation;
- the building footprint and excavation footprint;
- estimated soil volumes for phased excavation;
- site contours;
- environmentally sensitive areas (e.g. riparian setback);
- dedicated access and egress areas;
- design calculations, dimensions and location of the water treatment system;
- surface water conveyance to the water treatment system;
- discharge and monitoring location with direct connection to storm via onsite inspection chamber;
- additional ESC measures (e.g. erosion cover, stockpile cover and inlet protection); and
- environmental monitoring criteria.

2.0 Sediment Control System (SCS) Guidelines

2.1 Access and Egress

All sites will have dedicated construction access and egress area(s) and their locations will be approved by the Traffic Division of the Engineering Department. Entry and exit from the Site will be restricted to these areas.

All projects which involve significant soil work will be required to install a wheel wash (either mechanical or passive systems). The wheel wash must be utilized during the bulk excavation phase and shall not be removed without the written approval from the Engineering Department. A paved surface and speed bump is required to be provided between the wheel wash and the City roadway and be designed to prevent offsite flows (i.e. 2% min grade).

Mechanical wheel washes must be minimum 2.0 tire revolutions in length.
For passive wheel wash design refer to BBY-R110.

Projects with minor soil work may request access/egress areas which utilize the existing pavement or a truck stand. For truck stand design refer to BBY-A632.

2.2 Water Treatment System

A water treatment system is required to ensure that the discharge water quality remains in accordance with Burnaby Watercourse Bylaw No. 9044. The water treatment system may utilize either a mechanical system or settling pond(s) to treat water for suspended solids and pH levels as needed throughout the duration of the soil and concrete work for the development.

The water treatment system must include the following:

- pH treatment unit;
- sand filtration unit; and
- an automated sensor for NTU and pH readings with either system shut off or re-circulation when elevated levels are detected.

<u>Mechanical Water Treatment System</u>
City of Burnaby allows the use of Chitosan (1-2% in liquid form) in a mechanical water treatment system. All other chemicals including flocculants in the wheel wash or soil stabilizers must be submitted to the Engineering Department for review and approval. MSDS sheets for flocculants, CO_2 or other chemicals must be kept on site with their associated materials. A copy of the MSDS sheets will also be requested by the Engineering Department for record purposes.

A water treatment system schematic must be submitted from the service provider with the ESC plans to verify the components and sequencing of the system (see BBY-A634).

<u>Water Treatment Ponds</u>
Water treatment pond calculations, dimensions and design details must be signed and sealed by a professional engineer.

Settling ponds, detention ponds or sumps greater than 1.0 meter in total depth are required to have high visibility safety fencing.

2.3 Environmental Monitoring Criteria

An independent Environmental Monitor is required to be retained by the Developer to undertake sampling and reporting to ensure adherence to the SCS Permit requirements during construction. The attached template report is required to be submitted to ensure compliance with the following:

Applicable Bylaw: Watercourse Bylaw No. 9044
pH requirements: discharge water to have a pH of 6.0-8.5
Turbidity requirements: discharge water Total Suspended Solids (TSS) not to exceed 75 mg/L

Environmental Monitoring	Must be completed by a Qualified Person (QP). Acceptable designations include Applied Science Technologist (Asc.T), Environmental Professional in Training (EPt) or EP, BC Certified Erosion and Sediment Control Lead (CESCL) or equivalent, Engineer in Training (EIT), Professional Engineer (P. Eng), and Biologist in Training (BIT) or higher.
Monitoring Frequency	Weekly monitoring is required year round. Additional monitoring is required within 24 hours of a significant rainfall event (SRE)*. Additional monitoring is not required if the SREs are within 48 hours of each other. Reduced monitoring (bi-weekly) can be requested between May to Sept based on current site conditions and ESC performance up to the date of the request.
Sampling Parameters	Sampling will be submitted for laboratory analysis of TSS if field testing results exceed 49 nephelometric turbidity units (NTU). If the field measurements exceed 49 NTU or if the pH is outside the range of 6.0-8.5, the Contractor **must immediately cease discharge** until appropriate remedial measures have been undertaken. The Environmental Monitor may submit a Site specific calibration curve to the City if analytical results for TSS are consistently below 75 mg/L.
Report Submission	The first page of the templated report must be submitted within 24 hours of the monitoring event for Sites which are out of compliance. If laboratory analysis is required, the analytical results must be submitted within 7 calendar days. The complete templated report must be submitted within 7 days of the monitoring event for Sites which are in compliance. Reports are to be submitted to SCSMonitoringReports@burnaby.ca
Site Maintenance	No sediment-laden water from the work site shall be pumped out or otherwise discharged directly to a storm sewer system, watercourse, or other drainage system in such a manner as to bypass the sediment control system. Deficiencies identified by the Environmental Monitor are to be resolved within 24 hours or as soon as practically possible.

* Significant Rainfall Event (SRE) is more than 12.5 mm within 24 hours

Removal/Alterations of the SCS	No changes to the SCS are to be made without the Engineering Department's approval. Requests to remove system components or reduce monitoring frequency must be made by the Environmental Monitor and submitted to the Engineering Department for review. SCS monitoring shall continue until 95% of construction work, including landscaping, is completed. To request SCS monitoring termination, a final monitoring report should be submitted to confirm 95% completion. The final report should also confirm that all ESC measures have been removed from City property and all sediment has been removed from the roadways.

3.0 SCS Permit Application

All SCS permits are issued directly from the Engineering Department. Submissions or inquiries can be directed to the Engineering Department at 604-294-7460 or engineering@burnaby.ca.

In order to generate the SCS Permit fee, a sediment control cost estimate is required to be provided by a qualified professional. A signed and sealed letter is required from the estimator for the below items (please include only the items you will be installing on site):

Wheel wash:

- For a passive wheel wash system, estimated costs are determined by construction and material costs.
- For a mechanical wheel wash system, multiply monthly fees by the duration the wheel wash is needed to complete the bulk excavation.
- Water supply backflow preventer installation cost.
- Pavement costs between the wheel wash and the road.

Water treatment system:

- For a treatment pond, estimated costs are determined by construction and material costs.
- For a mechanical system, multiply monthly fees by 12 months.
- Estimated cost for consumables (e.g. flocculent)
- Estimated cost for the material and installation of all sediment mitigation measures such as silt fence, inlet protection, poly sheeting, etc.

The SCS permit fee will be calculated at 4% of the cost estimate. Payment can be made directly to the Corporate Services Department once the Engineering Department has provided written confirmation that the SCS Permit is ready to issue.

4.0 SCS Permit Issuance

Once issued, the SCS permit allows the developer to install the SCS equipment and measures according to the accepted ESC Plans. When installation is complete, an SCS installation Inspection Report signoff by the ESC design engineer must be submitted to the Engineering Department before requesting an SCS inspection. Upon receipt of the Inspection Report, the Engineering Department will require 48 hours to review the report and to schedule the SCS inspection.

SCS PERMIT SUBMISSION REQUIREMENTS AND REVIEW FLOW CHART

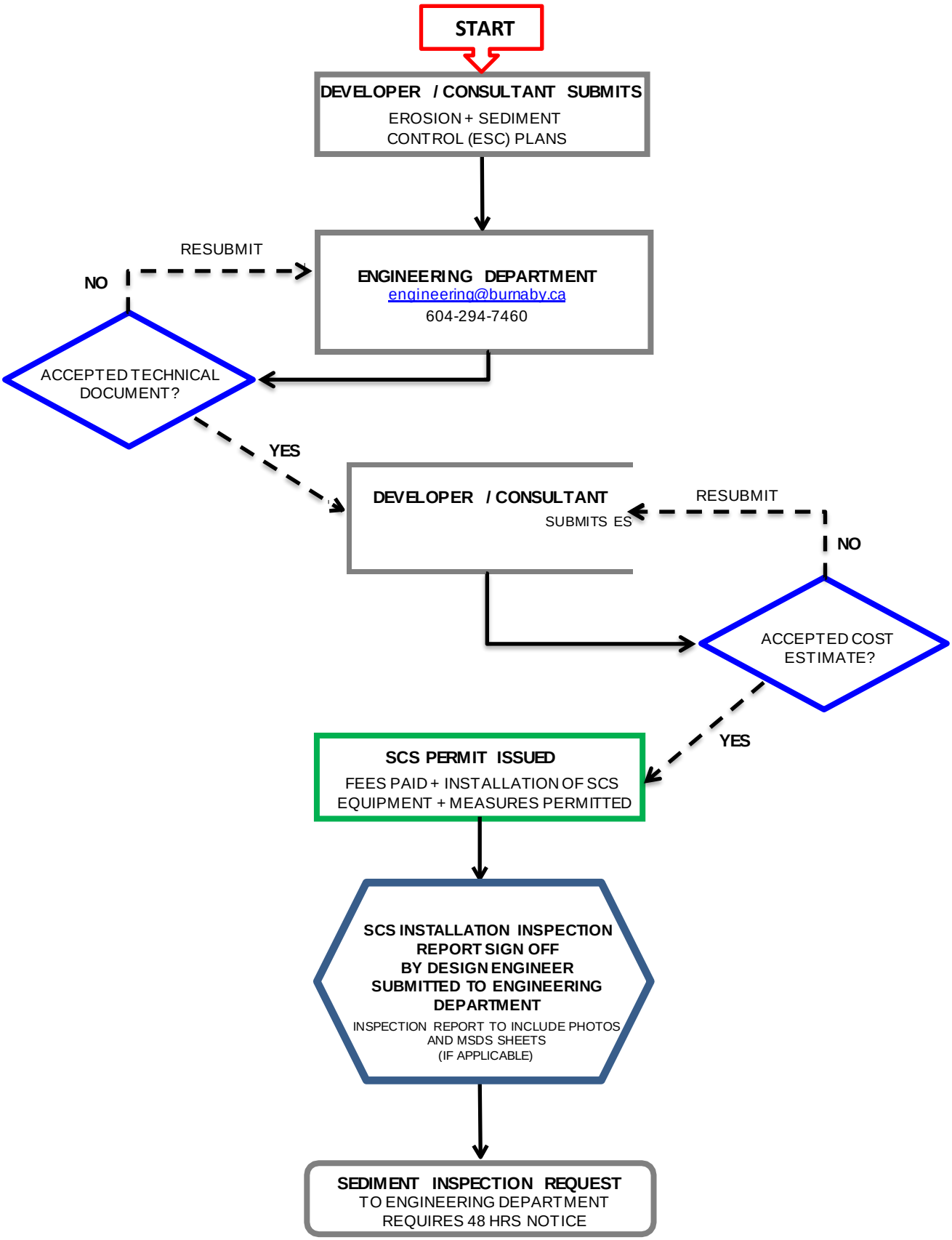

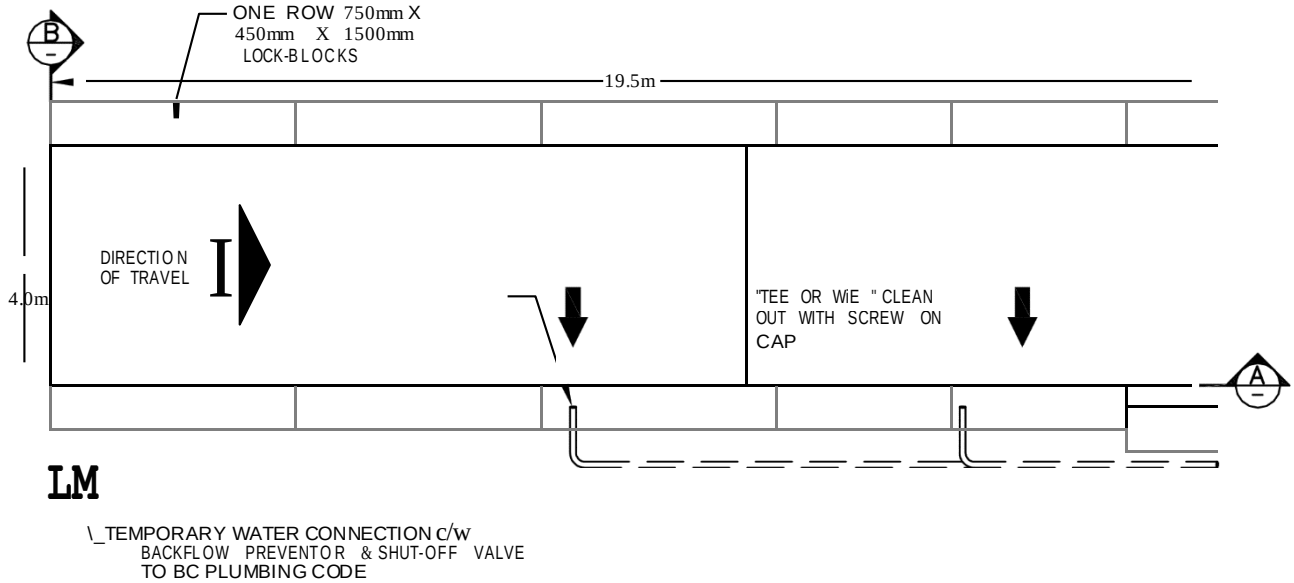

PLAN VIEW

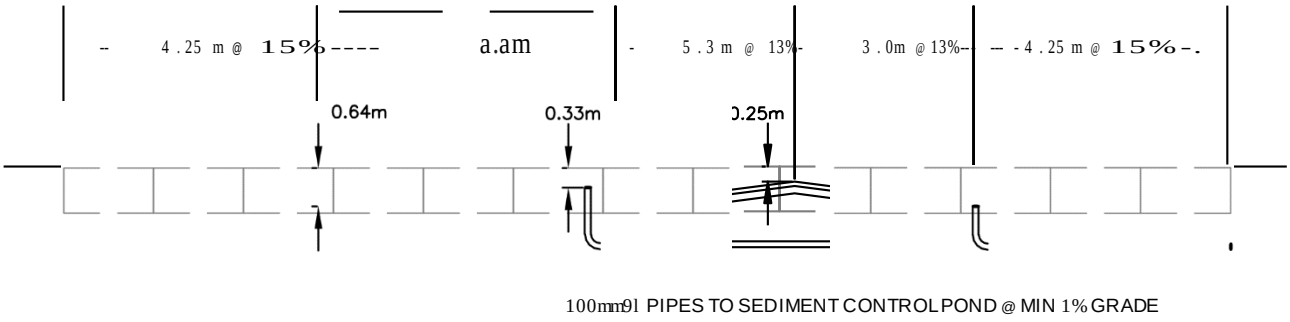

SECTION A

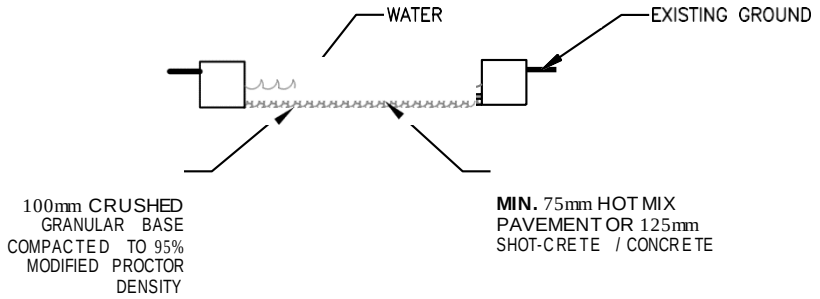

SECTION B

llilIE;_
1. ALL LOCK BLOCKS AND JOINTS TO BE GROUTED TO FORM LEAK TIGHT SYSTEM
2. PROTECT DRAINS BY RECESSING LOCK BLOCKS AT LOW POINTS
3. DRAIN OPENING TO HAVE A MANUFACTURED SLOTTED DRAIN CAP
4. WHEEL WASH TO APPROVAL OF ENVIRONMENTAL SERVICES

City of Burnaby
ENGINEERING DEPARTMENT

PASSIVE TRUCK WHEEL WASH DETAIL

BBY- R110

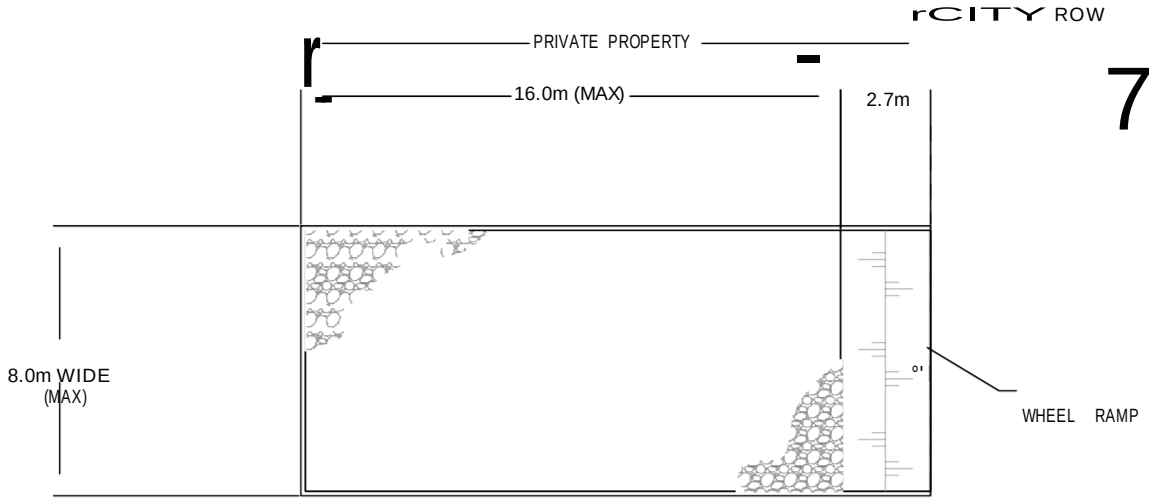

7

PLAN VIEW

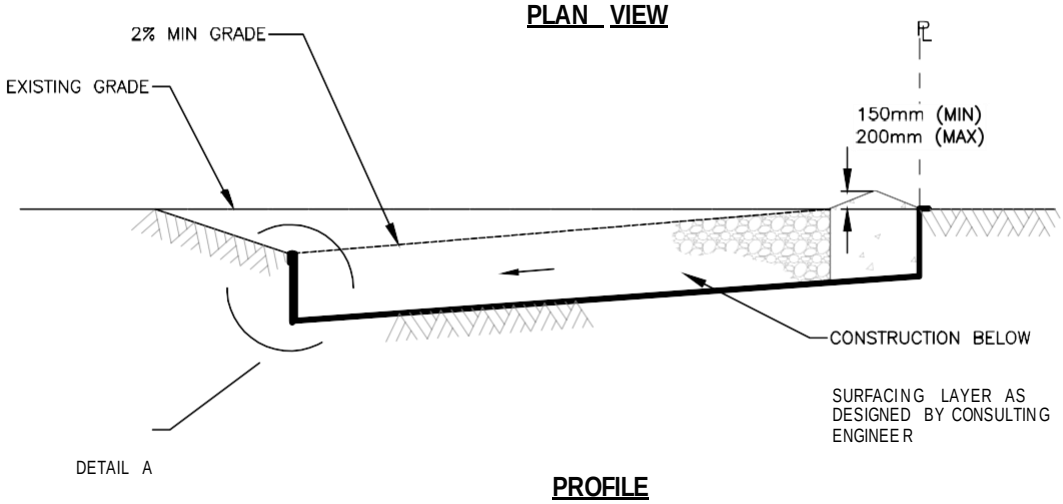

PROFILE

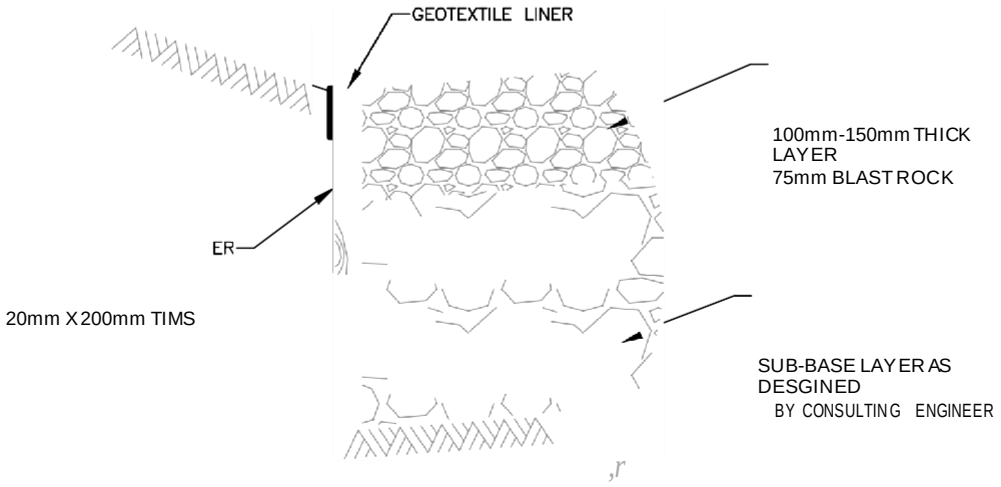

DETAIL A

City of Burnaby
ENGINEERING DEPARTMENT

TRUCK STAND (ON SITE)

BBY- A632

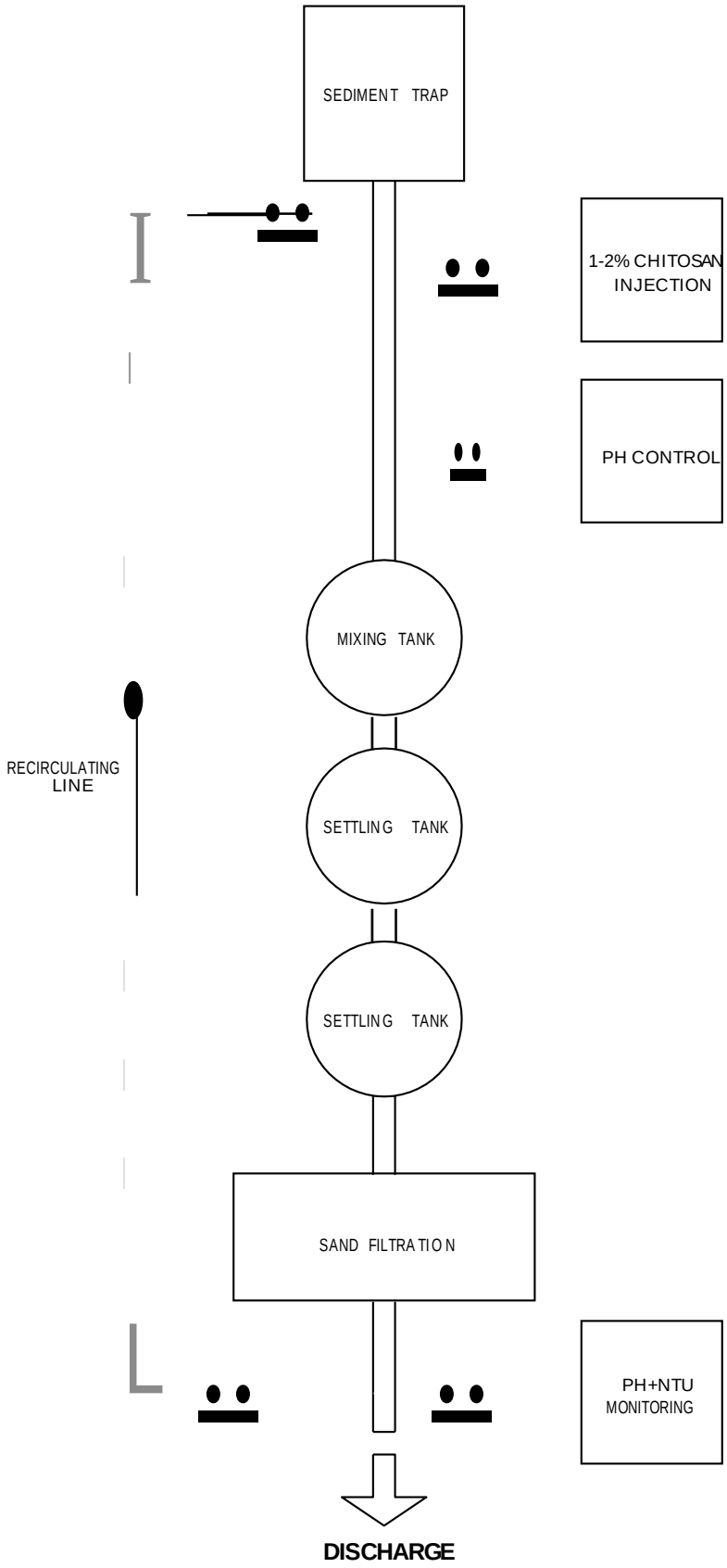

City of Burnaby
ENGINEERING DEPARTMENT

EXAMPLE WATER TREATMENT SCHEMATIC

BBY- A634

Erosion and Sediment Control Monitoring Report

(Page 1 must be submitted within 24 hrs if the site is NONCOMPLIANT)

Site COMPLIANT with City of Burnaby environmental requirements? **YES** ☐ **NO** ☐

Date: **Time of Arrival**: **Time of Departure**:	**Development Company:** **Location (Civic Address):** **Project Name:**
Weather Conditions	
At Inspection:	**24 hrs Prior to Inspection**:
Environmental Monitoring Firm:	
Monitor Name & Tel.:	**Reviewed by Site Super**:

Inspection Report Distribution	Name(s)	Tel Number / Email Address
City of Burnaby		SCSMonitoringReports@burnaby.ca
Development Firm		
Design Engineering		
Construction Contractor		

❖ **New Items Requiring Immediate Attention/Action:**

1.

2.

3.

Action must be complete by: _____

❖ **Correction Actions Outstanding Since (Date), and Why:**

Outstanding Issues From Last Inspection	Done (Y/N)	Comments Why Not Done
1.		
2.		
3.		
4.		

❖ **Key Observation and Recommendations:**

1. Perimeter Control	
Location	
General Comments	
Photos	
Recommended Actions	

2. Site Entrances and Traffic Areas	
Location	
General Comments	
Photos	
Recommended Actions	

3. Catch Basin Inlets	
Location	
General Comments	
Photos	
Recommended Actions	

4. Run-off Control	
Location	
General Comments	
Photos	
Recommended Actions	

5. Off Site Water Discharge	
Location	
General Comments	
Photos	
Recommended Actions	

6. Overall Site Conditions/Construction Phase	
Location	
General Comments	
Photos	
Recommended Actions	

❖ Sampling Data:

Summary of monitoring results including previous visits

Date	Time	Weather (precipitation mm)	Sample Location	Field pH	Field TSS or NTU (please circle)	Lab pH	Lab TSS mg/L

Attachment: Laboratory Analytical Report

Erosion and Sediment Control Daily Site Check List

(Completed by Contractor – Copy Must Remain On-Site)

Location of site: _____

Site Supervisor Name and Tel.: _____

Weekly of:_____Project Start Date:_____Project Completion Date:_____

It is required that site supervisor completes the following checklist **daily** while site work occurs.

ITEM AND/OR LOCATION TO CHECK	TIMING Each day – throughout the duration of works					
DATE	Mon	Tue	Wed	Thu	Fri	Sat
A. Have the trades staff and suppliers been made aware of the requirements for erosion and sediment control and the consequences involved if there is a breach?						
B. If required, has an Erosion and Sediment Control Management Plan been prepared and approved? ♦ Are all contractors and subcontractors aware of the contents of this plan?						
C. Are the sediment fences adequate and/or erected correctly? ♦ Geotextile sediment fence buried at least 200mm below ground ♦ Posts installed at minimum 2m spacing ♦ Built up sediment should not exceed 1/3 of the height of the sediment fence ♦ No tears or rips ♦ Not laying down or covered over by materials ♦ Is there an advisory/attention sign on the sediment fence?						
D. Is the wheel wash or the stabilized entry/exit point (truck stand/pad) in the correct location? (as indicated in approved plans) ♦ Are all trades people/suppliers using this entry point?						
E. Does the wheel wash or the entry/exit point (truck stand/pad) require maintenance? ♦ Does the wheel wash contain excessive sediment in its holding tank? ♦ Has the entry/exit pad got excessive sediment in it? If yes, turn over with a machine to expose coarse aggregate again ♦ Aggregate 100 to 150mm or greater ♦ Is sediment laden water generated from the truck wash being directed back towards the site?						

ITEM AND/OR LOCATION TO CHECK	TIMING Each day – throughout the duration of works					
DATE	Mon	Tue	Wed	Thu	Fri	Sat
F. Is the road clean of sand, silt and mud? ♦ Does the trades staff have the capacity to clean-up the sediment before they leave the site? ♦ Have you ensured sediment does not reach CB?						
G. Is there a contained area for building waste on site? ♦ Use a skip bin and /or mesh trap ♦ Cover the waste cage/bin at the end of each work day ♦ Place food packaging into waste cage/bin after each meal break ♦ Skip or waste cage should not be allowed to overflow ♦ Cover loads of waste when delivering to waste facility						
H. Are the silt sack traps in place?						
I. Is the sediment control system or the pond system well maintained and in good working condition?						
J. Are the 'wet trades' setting/washing up behind a sediment fence and on grassed areas that will hold the volume of waste?						
K. Are the stockpiles/sand/soil adequately protected? ♦ Covered by a plastic sheet ♦ Located behind a sediment fence ♦ Sand bags around base						
L. At the end of each working day do the temporary stockpiles on hard surfaces have: ♦ Stockpile fully covered? ♦ A bund wall of sandbags, fibre or geotextile on the down slope of the stockpile? ♦ A waterproof/windproof covering? ♦ An up-slope diversion of sandbags, fibre or geofabric for on-site stockpiles? ♦ Sandbags or geotextile bags filled with gravel surrounding the stockpile (if on-site road reserves)?						
M. Are the grass/turf strips on the footpath cleared of sediment, sand and mud?						
N. Are the service trenches backfilled?						
O. Are the temporary drainpipes correctly connected?						
P. Has the owner been advised about erosion and sediment control corrections? ♦ The site must have adequate control measures on-site at all times and even after hand over						